# PRODUCT ID: 3040
Switch

## MODEL
SG2 SPST/120VAC

## DIMENSIONS
4.5" H x 2.75" W x 1" D (est. 1 lbs)

## CONSTRUCTION
**Finish**: Switch plate brushed stainless steel
**Switch**: Switch with indicator lights
**Switch plate**: Stamped stainless steel pre-punched for switch(es) and indicator light(s)

## ELECTRICAL
**Input Voltage**: 120VAC

## FINISH
**Custom Switch Label**:

# Product View

NOTE: Sign image may not exactly represent the finished product. For illustration purposes only.

## Front View

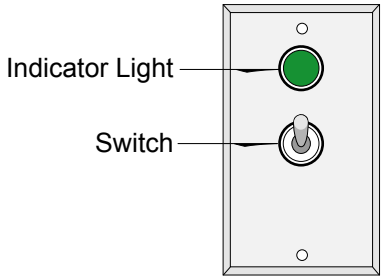


Single Gang

## Schematic View
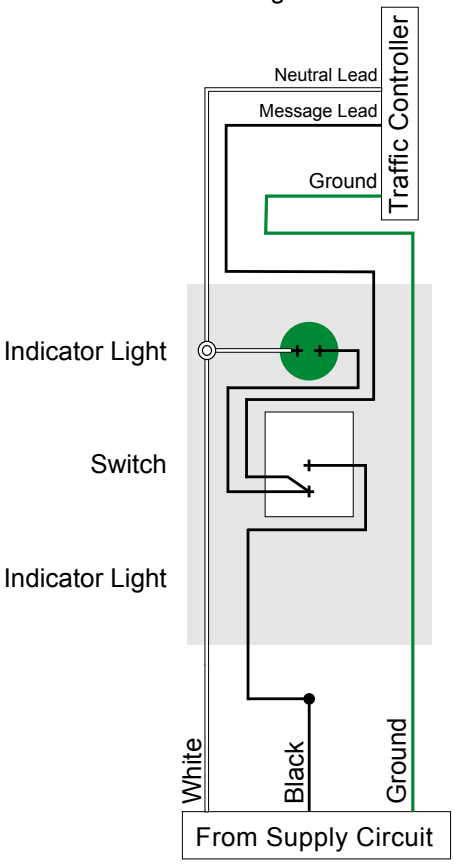
Single Pole
Single Throw