WET LOCATION COMPACT EXIT SIGN
RED Exit Letters

Project: _____ Location: _____

Date: _____ Part #: _____

Notes: _____



Battery Backup | CERTIFIED | RoHS compliant | WET LOCATION | WARRANTY 5 YEARS

Performance & Features

LED Source
- Letter 6” height with 3/4” stroke
- Super bright RED LED lamps
- 120/277VAC dual voltage operation

Certifications and Warranty
- FCC, CEC, DOE, ROHS Compliant
- 5-Year warranty for electrical parts and housing

Construction
- Injection-mold thermoplastic ABS housing, UL 94V-0 flame rating
- Wet Location Rated
- Universal J-Box mounting
- Built-in 3.6V 1200mAh Ni-Cd battery
- 90 minutes emergency operation
- Maximum 24 hours for full recharge time
- Test switch and charge indicator
- Double Sided face

SKU Guide

Example: ES-C-S-W-R-WH

Family	Face	Rated	Color	Housing
ES-C	**S** = Double Sided	**W** = Wet Rated	**R** = Red	**WH** = White

MEDINAH POWER

ES-C Family Spec Sheet

RED Exit Letters

Specification

Model No.	Rated Voltage	Input Current	Input Watt	LED Type	Finish	Emergency Runtime
ES-C-S-W-R-WH	120/277V	0.026-0.015A	2.9W	10pcs Red LEDs	White	90 Mins

Contact for custom configuration & specifications

Dimensions

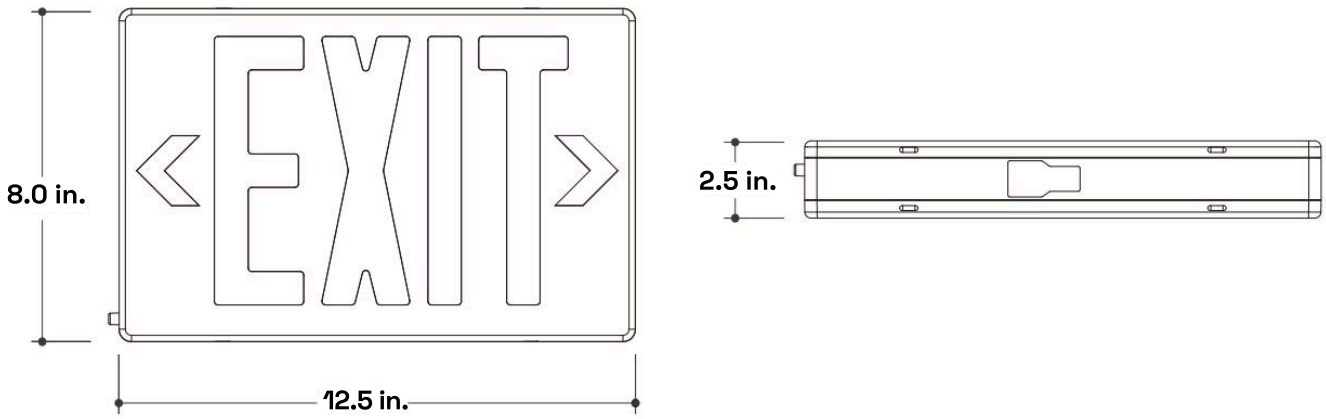

Packaging Dimensions

SKU#	Standard Carton	Qty	Master Carton	Qty
ES-C-S-W-R-WH	13.00X8.66X2.75 in	1	24.53X13.19X9.84 in	6