Operator's manual

TruTool TPC 165 (2A1)

Panel cutter

Table of contents

1	**Safety**	**3**
1.1	General safety information	3
1.2	Specific safety information for panel cutters	3
1.3	Additional safety warnings	4
2	**Description**	**5**
2.1	Intended use	5
2.2	Technical data	6
2.3	Icons	6
2.4	Noise and vibration information	7
3	**Setting work**	**9**
3.1	Changing/tensioning the tool	10
4	**Operation**	**13**
4.1	Working with the Panel Cutter	13
	Checking the tool	14
	Working procedure	14
	Overload protective device on the motor	16
4.2	Main machine position	16
4.3	Table markings	17
4.4	Plunging depth	18
4.5	Guide rails	19
	Working with the guide rail	19
4.6	Cutting along scribed line	20
4.7	Slide rails and wearing plate	20
	Replacing the slide rails	21
	Replacing the wearing plate	21
	Replacing the front wearing plate	21
4.8	Exhaust system	22
4.9	Electronic signal display	22
5	**Maintenance and repairs**	**24**
5.1	Maintenance	24
	Set screw - Adjusting the ratchet	25
	Retighten swivel arm clamping	25

5.2 Repairs 26
Replacing carbon brushes 26

6 Accessories and consumables 28
6.1 Ordering consumables 28

7 Appendix: Declaration of conformity, guarantee, replacement parts lists 29

1. Safety

1.1 General safety information

WARNING

Read all the safety information and instructions.

- Failure to comply with the safety information and instructions can cause electric shock, burns and/or serious injury.
- Retain all the safety information and instructions for future use.

1.2 Specific safety information for panel cutters

DANGER

Cuts due to saw blade

- Do not reach into the sawing area or touch the saw blade.
- Do not reach below the workpiece.
- Never hold the workpiece to be sawn in your hand or over your leg. Secure the workpiece to a stable support.
- Hold the power tool using the insulated handles when performing work where the power tool could come into contact with hidden power lines or its own cable.
- When making lengthwise cuts, always use a stop or a straight edge guide.

DANGER

Risk of injury due to kickback

- Hold the saw with both hands and move your arms into a position where you can absorb the kickback forces. Always keep the saw blade to one side of your body, never hold the saw blade in line with your body.
- If the saw blade jams or you interrupt your work, switch off the saw and hold it steady in the material until the saw blade has come to a standstill. Never try to remove the saw from the workpiece or to pull it backwards while the saw blade is moving, otherwise it could kick back.
- If you want to restart a saw that is inserted in the workpiece, centre the saw blade in the sawing gap and check that the saw teeth are not caught in the workpiece.
- Support large panels to reduce the risk of kickback due to a jammed saw blade.
- Do not use blunt or damaged saw blades.
- Take particular care when sawing into existing walls or other areas into which you cannot see

⚠ DANGER

Risk of injury due to working with a chainsaw

- When the saw is running, keep all parts of your body away from the saw chain. Ensure that the saw chain is not touching anything before starting the saw.
- Hold the chainsaw by the insulated handle surfaces, because the saw chain could come into contact with concealed electrical cables or its own power connection cable.
- Wear eye protection. Additional protective equipment is recommended for your ears, head, hands, legs and feet.
- Do not work with the chainsaw on a tree, ladder, roof or in an unstable standing position.
- Always ensure you have a firm standing position and only use the chainsaw when you are standing on firm, secure and level ground.
- Follow the instructions for lubrication, chain tension and changing accessories.
- Keep the handles dry, clean and free of oil and grease.

1.3 Additional safety warnings

Personal safety

Note

Do not let familiarity gained from frequent use of tools allow you to become complacent and ignore tool safety principles.

A careless action can cause severe injury within a fraction of a second.

Power tool use and care

Note

Keep handles and grasping surfaces dry, clean and free from oil and grease.

Slippery handles and grasping surfaces do not allow for safe handling and control of the tool in unexpected situations.

2. Description

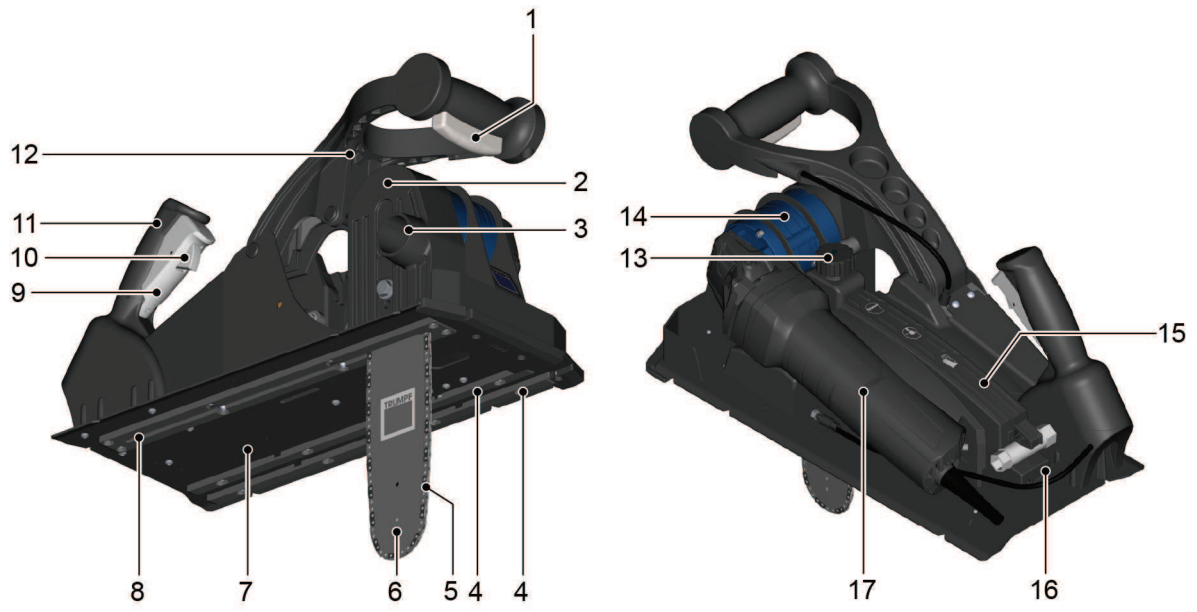

1	Swivel lever, blade	7	Support table	13	Oil tank cover
2	Protective cover	8	Wearing plate	14	Gearbox
3	Suction connection piece, vacuum cleaner	9	Switch, saw chain	15	Cover
4	Slide rails	10	Adjustable grip	16	Combination wrench
5	Saw chain	11	Release button	17	Motor
6	Blade	12	Lever handle, blade		

TruTool TPC 165 Fig. 67302

2.1 Intended use

⚠ WARNING

Danger of injury and health hazard!

- ➢ Only use the machine for the work and materials described under "Intended use".
- ➢ Do not cut materials containing asbestos.

The TRUMPF Panel Cutter TPC 165 is an electrically operated hand-held device:

- For commercial use in industry and trade.
- For efficiently cutting panels with metal outer shells and polyurethane or polyisocyanurate rigid foam insulation (roof and wall panels).
- For easy piercing in panels for producing cornered cutouts.
- For cutting along a scribed line.
- For cutting with a guide rail.

2.2 Technical data

	Other countries			USA
	Values			
Voltage	230 V	120 V	110 V	120 V
Frequency	50/60 Hz	50/60 Hz	50/60 Hz	50/60 Hz
Working Speed	4 m/min	4 m/min	4 m/min	9.8 ft/min
Nominal power consumption	1600 W	1600 W	1600 W	1600 W
Idle stroke rate n_0	2300/min	2300/min	2300/min	2300/min
Cutting track width	4 mm	4 mm	4 mm	4 mm
Weight	9.6 kg	9.6 kg	9.6 kg	21.2 lbs
Safety classification:	II / ⧈	II / ⧈	II / ⧈	II / ⧈

Technical Data Tab. 1

	Other countries	USA
	Permissible material thicknesses	
Individual material thickness for steel up to 400 N/mm$_2$	0.9 mm	0.9 mm (0.035 in)
With insulation made of polyurethane foam (PUR) and polyisocyanurate foam (PIR)	165 mm	165 mm (6.4 in)

Permissible material thicknesses Tab. 2

	Other countries	USA
	Minimum cutouts	
Blade 165	340 x 340 mm	340 x 340 mm (13.5 x 13.5 in)

Minimum cutouts Tab. 3

2.3 Icons

Note

The following symbols are important for reading and understanding the operator's manual. The correct interpretation of the symbols will help you operate the machine better and safer.

Icon	Name	Description
	Read operator's manual	Read the operator's manual and safety information in their entirety before starting up the machine. Closely follow the instructions given.
	Wear safety glasses.	Chips could fly out of the tool.
	Wear gloves.	Chips could fly out of the tool.
	Wear hearing protection.	Noise emission value can be exceeded.
	Danger of injury due to rotating saw.	Do not reach into the saw chain with your hands.
⧈	Safety class II	Indicates a doubly insulated tool.
∼	Alternating current	Type or property of current
V	Volt	Voltage
A	Ampere	Current, current input
Hz	Hertz	Frequency (oscillations per second)
W	Watt	Power, power input
mm	Millimeters	Dimensions e.g.: material thickness, chamfer length
in	Inch	Dimensions e.g.: material thickness, chamfer length
n_o	Idle speed	Revolution speed without load
.../min	Revolutions/strokes per minute	Revolution speed, stroke rate per minute

Tab. 4

2.4 Noise and vibration information

⚠ WARNING

Noise emission value may be exceeded.

➢ Wear hearing protection.

⚠ WARNING

The vibration emission value can be exceeded!

- Select the right tools and exchange them in time in the event of wear.
- Have maintenance carried out by trained specialized technicians.
- Define additional safety measures for protecting the operator from the effect of vibrations (e. g. keep hands warm, organization of working procedures, machining at normal feed force).
- Depending on the operating conditions and state of the electric tool, the actual load might be higher or lower than the specified measured value.

⚠ WARNING

Health risks especially damage to muscles and joints due to strong vibrations during operation.

- Carry out machining at normal feed power.

Notes

- The specified vibration emission value was measured in accordance with a standardized testing procedure and can be used to compare one electric tool with another.
- The specified vibration emission value can also be applied for a provisional estimate of the vibration load.
- Times during which either the machine is switched off or running but not actually in use can considerably reduce the vibration load during the entire working period.

Designation of measured value	Unit	Value according to EN 60745
Vibration emission value a_h (vector sum of three directions)	m/s^2	2.8
Uncertainty K for vibration emission value	m/s^2	1.5
A-class acoustic pressure level L_{PA} typically	dB (A)	107
A-class acoustic power level L_{WA} typically	dB (A)	118
Uncertainty K for noise emission value	dB	4

Tab. 5

3. Setting work

DANGER

Risk of fatal injury due to electric shock!

- Remove the plug from the plug socket before changing the tool or undertaking any maintenance work on the machine.

NOTICE

Damage to property!

Wear and destruction of the saw chain and blade, tool failure.

- Do not tension the saw chain too tautly (see "Fig. 67306", pg. 11).
- When inserting the saw chain, always pay attention to the tooth direction.
- Do not operate the saw chain without lubricant (see "Tab. 8", pg. 24).
- Avoid collisions during work. Do not cut into nails, screws, etc.

NOTICE

Damage to property due to the wrong tools being used!

Reduction in service life of the tools.

- Depending on the application, use the right tools according to the following table.

	Panel thickness (outer plate + foam insulation)
Saw chain 165 with blade 165	max. 165 mm

Tab. 6

Both the saw chains as well as the blades are meant for processing panels with outer plates up to a tensile strength of 400 N/mm² and a thickness up to 0.9 mm. A panel thickness up to 165 mm with foam insulation can be processed.

The machine is suitable for cutting panels with the insulation materials polyurethane foam (PUR) and polyisocyanurate foam (PIR).

Note

If the structure of the panels to be processed vary from the above-described version (thicker outer plates or higher tensile strength, other insulation materials), it is to be expected that the service life of the saw chain and blade will be reduced. Also, penetrating into the material with the blade might be more difficult, or might not be possible at all.

3.1 Changing/tensioning the tool

Removing the saw chain

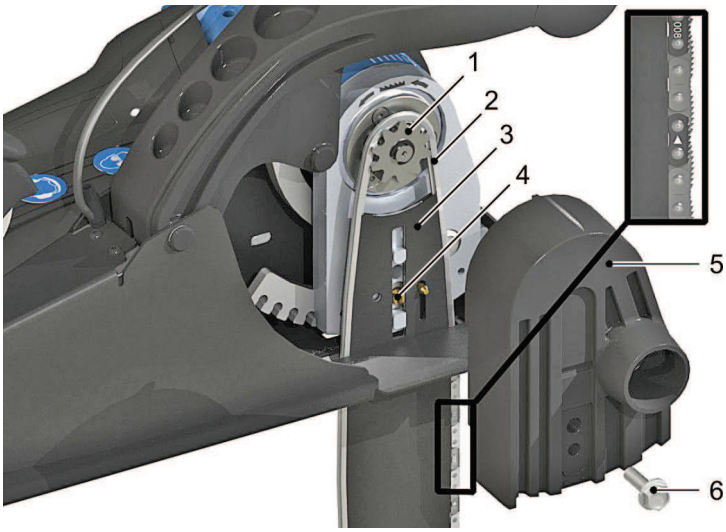

1	Chain wheel	4	Chain tightener
2	Saw chain	5	Protective cover
3	Blade	6	Hexagon-head screws

Fig. 67303

1. Loosen the hexagon-head screw (6) using a combination wrench (in the cover) and remove.
2. Take off the protective cover (5).
3. Shift the blade (3) by turning the chain tensioner (4) toward the chain wheel (1).
4. Lift the saw chain (2) with the blade (3) out of the chain wheel (1).

Check and clean oil channel

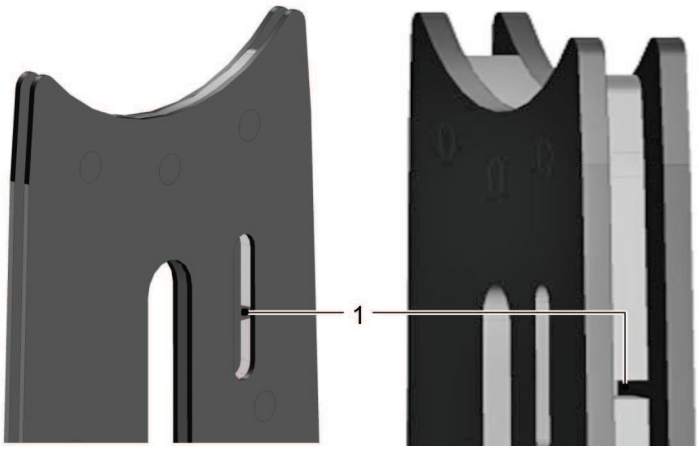

1 Oil channel

Fig. 31844

NOTICE

Damage to property.

A clogged oil channel can lead to increased wear or to the saw chain breaking.

➢ Clean the oil channel regularly.

5. Let the machine run in idle run to check the oil channel. Splashes on the support indicate that the oil channel is dirty.
6. Clean oil channel with a suitable tool or wire.

Inserting the saw chain

7. Insert a new saw chain in the blade and chain wheel. While doing so, pay attention to the running direction (arrow) of the saw chain.

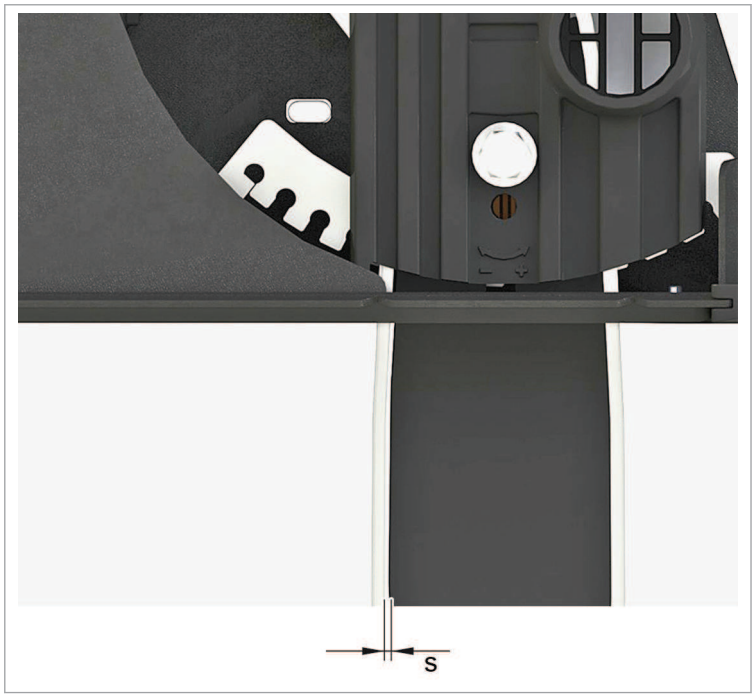

Correct chain tension Fig. 67306

8. Shift the blade by turning the chain tensioner. Tension the saw chain until it can be lifted approx. 3 mm (dimension, see Fig. 67306) from the blade by hand (measuring point is middle of blade).
9. Stick on the protective cover.
10. Screw the protective firmly in place using the hexagon-head screws (6).

Tensioning the saw chain

11. Loosen the hexagon-head screw (6) using a combination wrench (in the cover) with one turn.
12. Shift the blade by turning the chain tensioner.
13. Tension the saw chain until it can be lifted approx. 3 mm (dimension, see (see "Fig. 67306", pg. 11)) from the chain rail by hand (measuring point is middle of chain rail).

14. Screw the protective cover firmly in place.
15. After a few meters of cutting, check the tension again and retighten the saw chain if necessary.

4. Operation

4.1 Working with the Panel Cutter

⚠ CAUTION

Damage to property due to excessively high line voltage!

This could result in motor damage due to overload.

- Check the line voltage. The power supply voltage must correspond to the information on the nameplate of the machine.

⚠ WARNING

Risk of injury due to improper handling!

- Make sure the machine is always in a stable position when operating it.
- Never touch the tool while the machine is running.
- Always operate the machine away from your body.
- Do not carry out overhead work on the machine.
- The machine may only be operated with the protective cover.

2-hand control device

Work is performed with two-hand operation for all machine positions.

Two-hand operation Fig. 67304

When operating the machine ensure that the machine is held with both hands in such a way that both hands are kept away from the processing point.

Checking the tool

NOTICE

Damage to property caused by blunt tools!

Machine overload.

- Check tools every hour for wear. Sharp saw blades have good cutting performance and prevent damage to the device. Change the saw chain in due time.

- Check whether both tools, the saw chain and the blade, are correctly mounted.

Working procedure

NOTICE

Damage to property!

Wear and destruction of the saw chain and blade, tool failure.

- Do not tension the saw chain too tautly (see "Fig. 67306", pg. 11).
- When inserting the saw chain, always pay attention to the tooth direction.
- Do not operate the saw chain without lubricant (see "Tab. 8", pg. 24).
- Avoid collisions during work. Do not cut into nails, screws, etc.

Putting integrated lubrication device into operation when used for first time

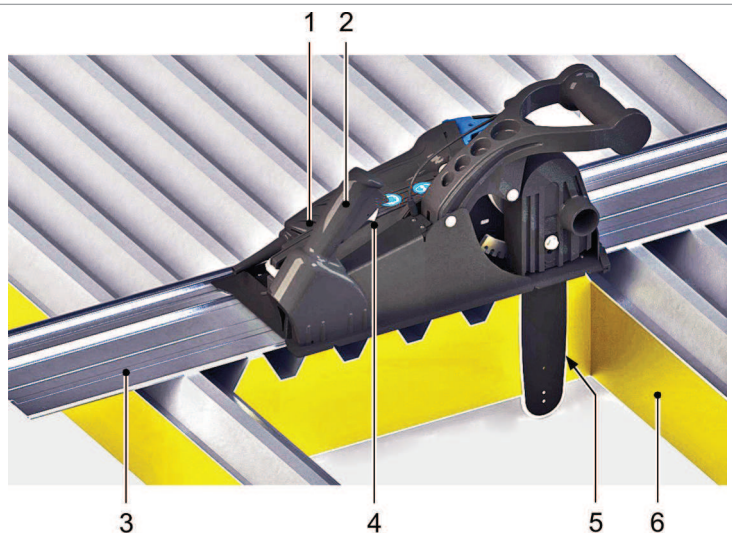

1	Motor	4	Release button
2	Switch	5	Saw chain
3	Guide rail	6	Panel

Fig. 67305

1. Fill the oil tank with punching and nibbling oil.
2. Press the release button (4)(see "Fig. 67305", pg. 15) and then press the switch (2).

   Motor (1) switches on, saw chain (5) runs.
3. Keep the switch (2) pressed for approx. 2 minutes until both oil hoses have filled with oil.

Working with the Panel Cutter

⚠ WARNING

When piercing into the full panel, the panel can kick back when the running tool comes into contact with it.

- ➢ Do not move the machine up to the workpiece until it is switched on and has reached full revolution speed.
- ➢ Hold the machine firmly.

4. Pierce into the material from above.

Checking the chain tension and oil level

Notes

- A new chain will elongate and must be retensioned after approx. 15 - 20 cut meters.
- If the saw chain jams during cutting, immediately switch off the motor (see "Fig. 67305", pg. 15) (2), retract the machine and restart.

5. Cut the material.

   When cutting, the chain tension (section 3.2) and the oil level (oil level indicator below the angular gear) must be checked regularly.

   Tip

   During cutting, the saw chain is constantly lubricated with the fully automatic lubricating device. The lubricating oil is usually sufficient for a cutting length of approx. 150 m.

Switching off the Panel Cutter

6. Release the switch (2) (see "Fig. 67305", pg. 15).

   The saw chain (5) will stop within 2 seconds and the motor shuts off.

7. Swing in the blade.

   The blade is in its parking position and is thereby protected from contamination and damage.

8. Have the machine lie level with the table on the panel (6) or guide rail (3).

Overload protective device on the motor

Notes

- The appliance may switch off prematurely when affected by electromagnetic interference. The appliance will resume operation when the faults have been cleared.
- If the motor load is too high, the motor limits the input power. The red indicator light (LED) on the motor lights up.

1. Let the machine cool down while idling.
2. Operate the machine normally after it has cooled down.

4.2 Main machine position

In the main machine position, the machine lies with the support table flat on the material and the blade is aligned vertically downward. Cutting in the main machine position generates a vertical cut.

Main machine position Fig. 67307

4.3 Table markings

The three markings on the side of the table indicate the front and rear sides of the blades in the main machine position and the blade insertion positions. If the chain tension slackens, the actual cutting edge deviates from the marked position.

1 Blade insertion position in the support table
2 Rear side of the blade
3 Front side of the blade
4 Cut marking, front
5 Marking for straight cut

Markings on the support table Fig. 67308

For a straight cut, make sure that the marking (4) lies at the cut each time.

4.4 Plunging depth

The scale on the gear housing indicates the plunging depth of the blade in stages 0 - 12.

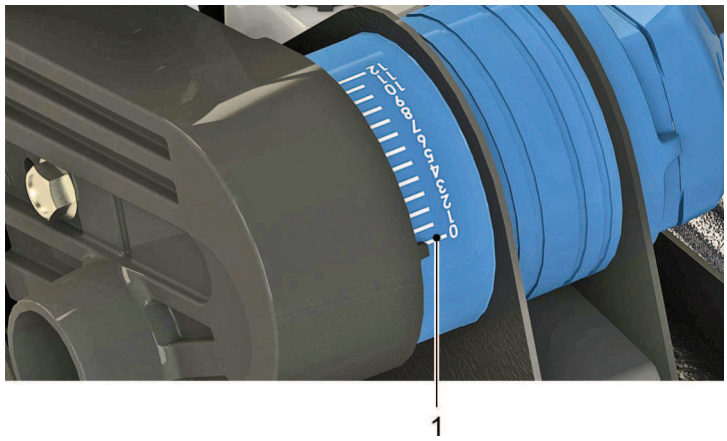

1 Scale on the gear housing

Fig. 67464

4.5 Guide rails

Using the guide rail (options)

Using the guide rail allows:

- a clean, straight cut.
- better machine guidance.
- easy processing of roof panels (trapezoidal shape).
- protection of the panel surfaces. Scratch-free panel processing is possible.

Working with the guide rail

The guide rail (4), together with the guide notch (3) in the machine table, guarantees straight machine guidance.

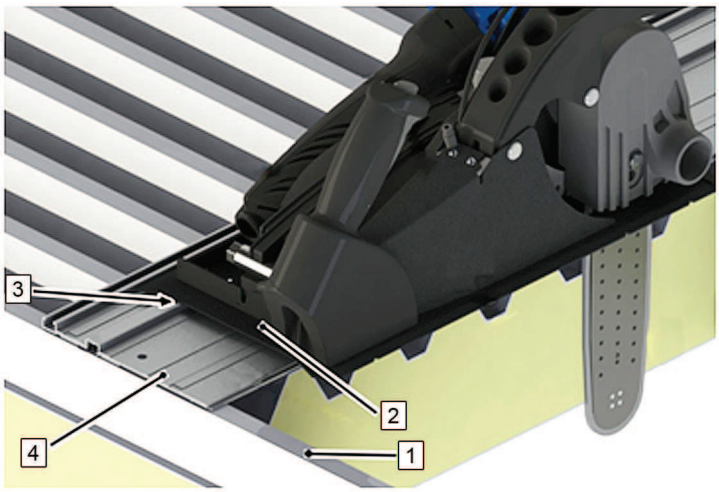

1	Panel	3	Guide notch in the machine table
2	Machine support table	4	Guide rail

Machine with guide rail Fig. 67309

1. Place the guide rail (4) on the work surface. The guide rail does not have to be fastened when used horizontally. The bottom side is slip-resistant.

   Note

   To extend the guide rail, join two single guide rails with connectors.

2. Place the machine support table (2) with the guide notch (3) on the guide rail (4).

4.6 Cutting along scribed line

When working without a guide rail, a scribed line might be of help when cutting straight cuts.

The distance between the blade and the edge of the table is 40 mm. This distance can be used to cut along a scribed line.

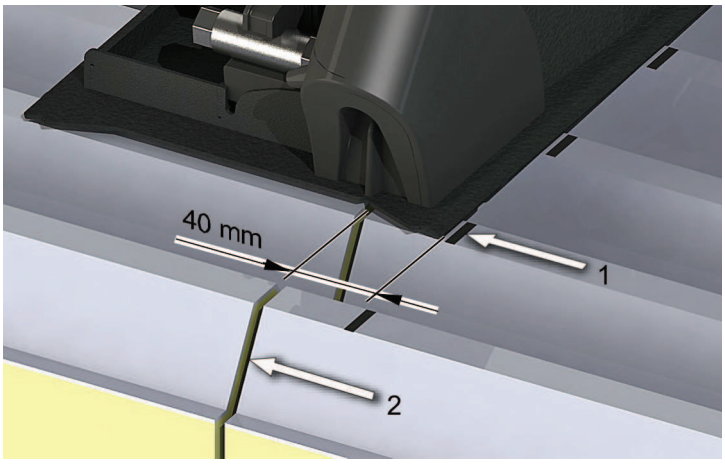

1 Scribed line 2 Cut

Straight cut with scribed line Fig. 67310

Using the table markings at the front and back (see "Fig. 67308", pg. 18), the cut can be made at the marking directly. Make sure that the markings are always above the line or cut.

4.7 Slide rails and wearing plate

The wearing plate (1) on the bottom side of the machine table (2) guarantees a good cut quality and protects the machine while processing on the work table. To avoid scratches when processing panels, the bottom side of the machine table is equipped with 2 slide rails (3) made of plastic and a wearing plate at the front.

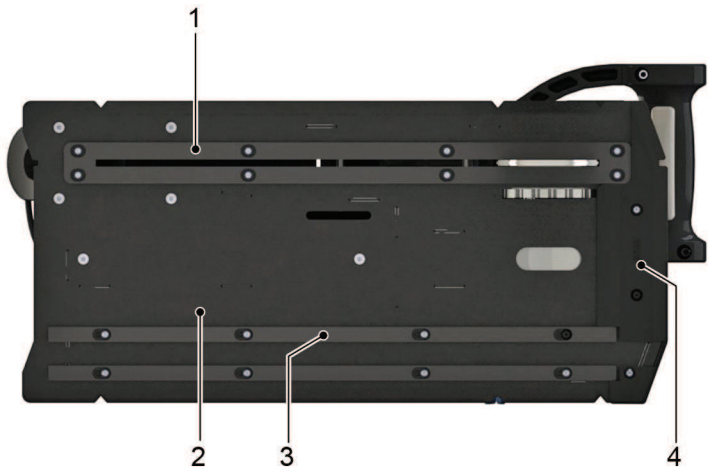

1	Wearing plate	3	2 slide rails
2	Support table, bottom	4	Wearing plate, front

Bottom of tool table with wearing plate and slide rails Fig. 67311

Replacing the slide rails

Each slide rail is held in place by 4 screws.

1. Remove the 4 screws of the slide rail.
2. Change worn slide rails.
3. Refasten the new slide rail with the 4 screws.

Replacing the wearing plate

The wearing plate is held in place by 8 screws.

1. Remove the 8 screws of the wearing plate.
2. Turn the wearing plate (worn on one side) by 180°. Change wearing plates worn on both sides.
3. Refasten the wearing plate with the screws.

Replacing the front wearing plate

The wearing plate is held in place by 3 screws.

1. Remove the 2 screws of the wearing plate.
2. Replace the worn wearing plate.

3. Refasten the wearing plate with the screws.

4.8 Exhaust system

⚠ WARNING

Escaping particles pose a health hazard!

➢ Use suction. Suctioning will protect the user from harmful particles and will keep the work environment free of unpleasant dust.

The machine is equipped with a suction connection piece (1) (35 mm, DIN 44717-A35).

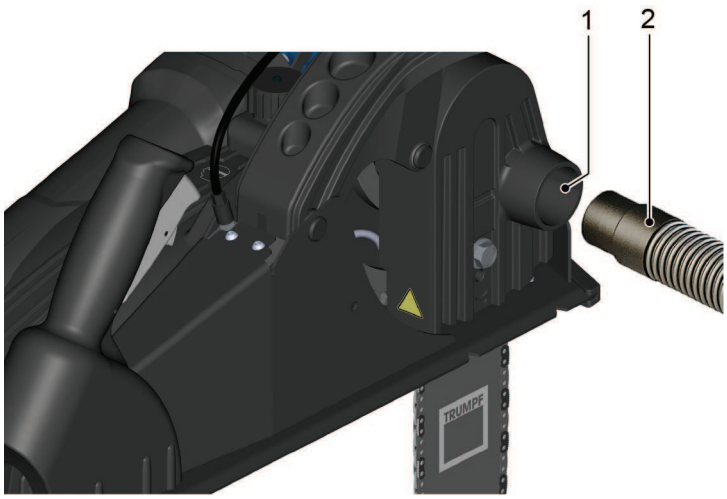

1 Suction connection piece 2 Suction device

Fig. 67312

The suction devices (2) to be connected, such as an industrial vacuum cleaner, must be suitable for coarse dust and hot metal filings.

4.9 Electronic signal display

On the motor, there is an electronic signal display next to the shown markings.

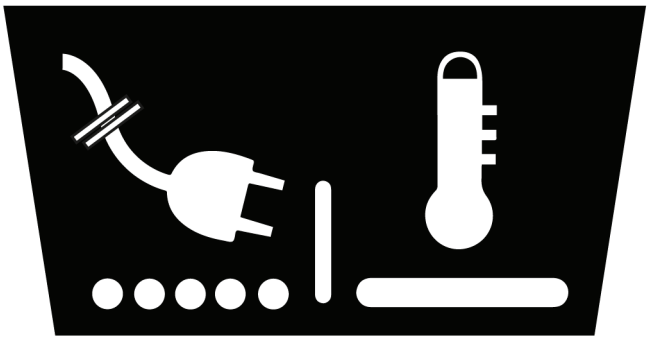

Electronic signal display Fig. 67536

Status	Description
The electronic signal display is illuminated and the load speed decreases.	The winding temperature is too high! Let the machine run idle until the electronic signal display goes out.
The electronic signal display flashes and the machine does not run.	The restart protection responded. If the power plug is plugged in while the machine is switched on or if the power supply is reestablished after an interruption, the machine does not start up. Switch the machine off and on again.

Tab. 7

5. Maintenance and repairs

5.1 Maintenance

1	Gear head	3	Saw chain
2	Oil tank cover	4	Ventilation slots

Maintenance points on the Panel Cutter TPC 165 Fig. 67313

Maintenance point	Procedure and interval	Recommended lubricants	Lubricant Order No.
Ventilation slots (4)	Clean as needed.[1]	-	-
Oil channel	Clean as needed.	-	-
Saw chain (3)	Refill with oil as needed (2). One oil filling is usually sufficient for a cutting length of approx. 150 m.	▪ Punching and nibbling oil (1 x 500 ml) ▪ BLASER Vascomill USK 10 ▪ Other chain oils with viscosity VG 5-6, DIN 51550/51562	103387
Gearbox and gear head (1)	After 100 operating hours, arrange for a trained specialist to regrease or to replace the lubricating grease.	Lubricating grease "G1“	139440
Set screw (see maintenance point "Set screw - Adjusting the ratchet")	If engagement or disengagement no longer works reliably.	-	-

Maintenance positions and maintenance intervals Tab. 8

1 It is recommended to blow out with compressed air when running idle.

Set screw - Adjusting the ratchet

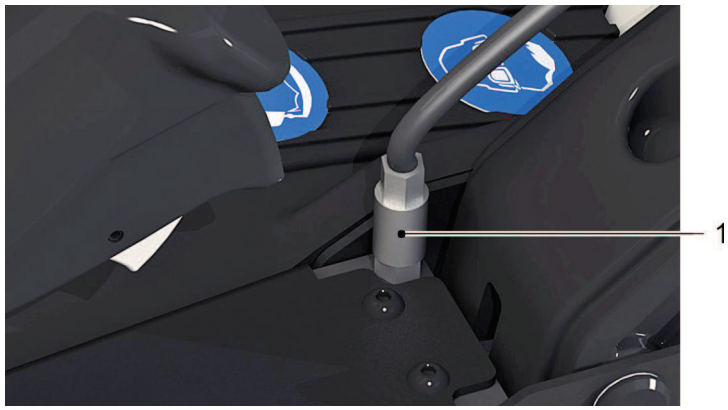

1 Adjusting screw

Fig. 67465

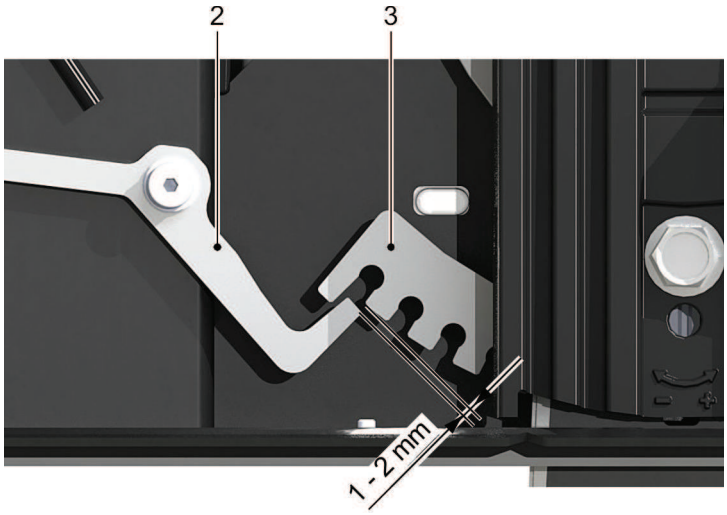

2 Catch 3 Ratchet disc

Fig. 67462

➢ With the set screw (1), adjust the position of the catch (2) so that this is approx. 1 - 2 mm away from the ratchet disc (3) when actuated.

Retighten swivel arm clamping

Due to wear, it is possible for there to be excessive play at the swivel arm on which the chain rail is mounted.

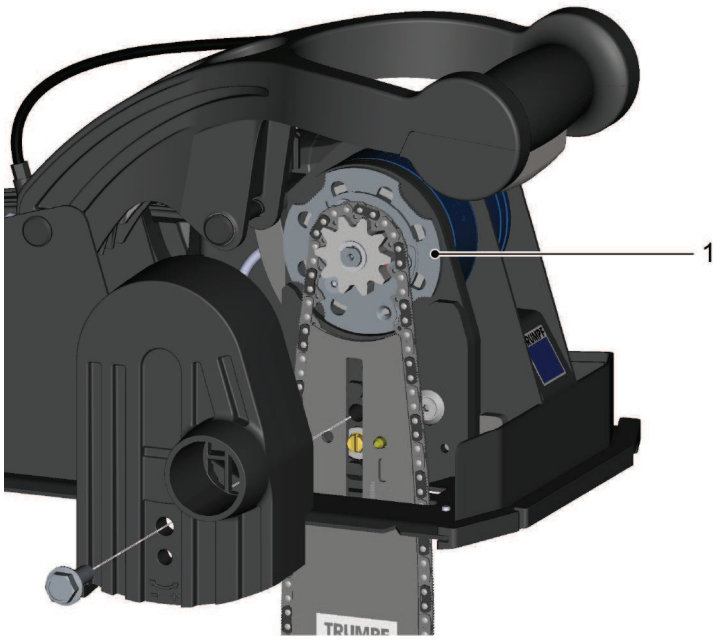

1 Washer

Swivel arm clamping Fig. 104772

1. Loosen the hexagon-head screw using a combination wrench (in the cover) and remove.
2. Take off the protective cover.
3. Tighten the washer (1) by hand clockwise and then back to the last detent position.
4. Reinstall the protective cover.

5.2 Repairs

WARNING

Risk of injury due to incorrect repair work

Machine does not work properly.

- Maintenance may be carried out by trained specialist technicians only.
- Repairs by TRUMPF Service.
- Use recommended lubricant.

Replacing carbon brushes

The motor comes to a standstill whenever the carbon brushes are worn out.

Notes

- Use only original spare parts from TRUMPF.
- Observe the information on the rating plate.

➢ Have the carbon brushes checked and replaced as required by a qualified technician.

6. Accessories and consumables

	Scope of delivery	Consumables	Accessories	Order number
Saw chain 165	X	X	-	1730983
Blade 165	X	X	-	1809537
Slide rails (2x)	X	X	-	1814882
Wearing plate	X	X	-	1814819
Wearing plate, front	X	X	-	1814820
Combination wrench	X	-	-	1797742
Case	X	-	-	1798090
Operator's manual TruTool TPC 165 (1A1)	X	-	-	1805994
Safety information	X	-	-	0125699
Punching and nibbling oil 1 x 500 ml)	X	-	-	0103387
Guide rail 1400 mm	-	-	X	1831777
Connector for guide rail	-	-	X	1831778

Accessories and consumables Tab. 9

6.1 Ordering consumables

Note

The following data must be specified in order to ensure that parts are delivered correctly and without delay.

1. Specify the order number.
2. Enter further order data:
   - Voltage data
   - Quantity
   - Machine type
3. Specify the complete shipping information:
   - Correct address.
   - Desired delivery type (e.g. air mail, courier, express mail, ordinary freight, parcel post).

   Note

   For TRUMPF service addresses, see www.trumpf-powertools.com.
4. Send the order to the TRUMPF representative office.

7. Appendix: Declaration of conformity, guarantee, replacement parts lists